Lightweight StoneLite Trough
L150 × W50 × H50 cm
Volume:375L Weight: 49kg

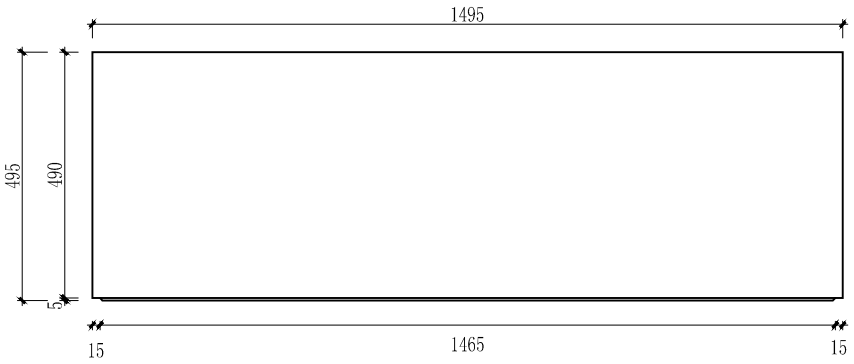

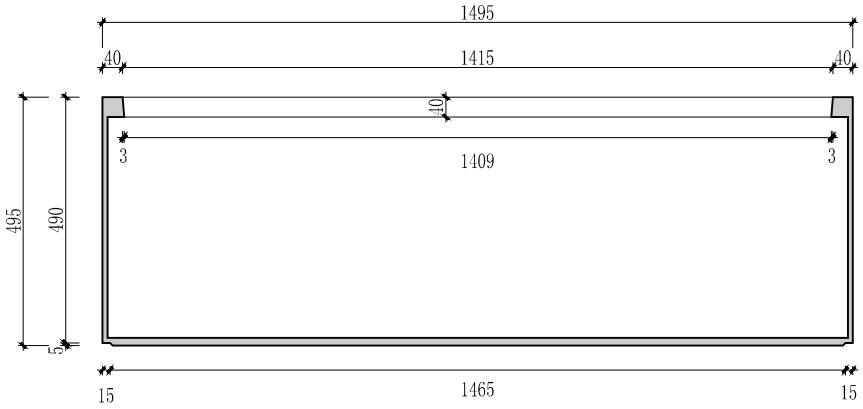

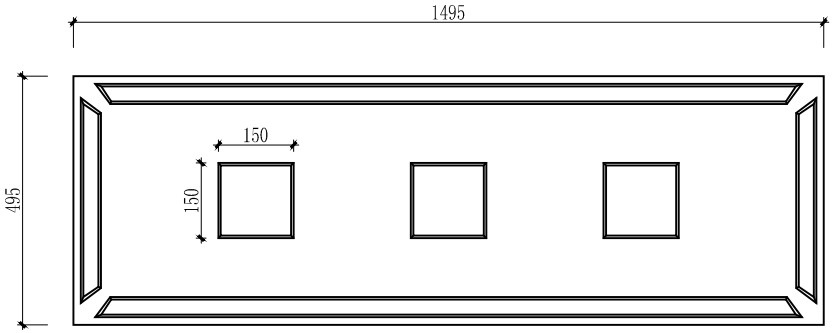

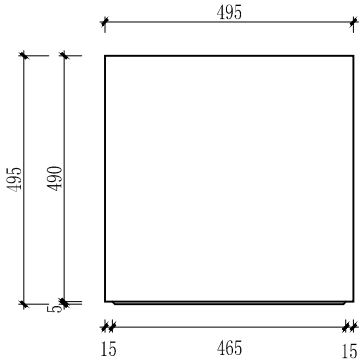

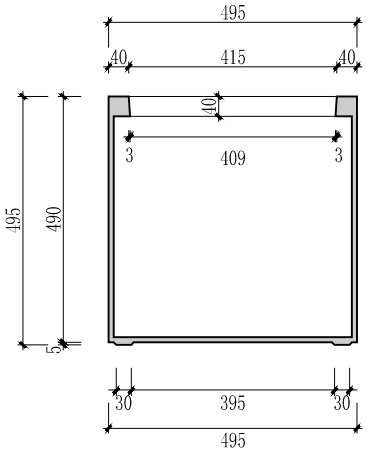

StoneLite GRC trough planter

81017-2_150: L150 × W50 × H50 cm

(the pot will be supplied with drainage holes)